Public Works Manual

Revised September 2015

Appendix D: Storm Sewer

Appendix D
Typical Storm Sewer Details

D.1 – 4’ Scupper Detail
D.2 – 6’ Scupper Detail
D.3 – 8’ Scupper Detail
D.4 – Storm Sewer Trench Detail
D.5 – Valley Pan Detail
D.6 – Curb Inlet

GENERAL NOTES

1. TOP SLAB OF CULVER SHALL BE SLOPED TO MATCH SIDEWALK. SEE D-6.
2. EXPOSED STEEL SHALL BE GALVNAIZED IN ACCORDANCE WITH AASHOT M-111.
3. KEY JOINTS WHERE WALLS CONNECT TO TOP SLAB AND BASE.
4. REINFORCEMENT IN WALLS AND BASE SHALL BE 3" FROM THE SIDE EXPOSED TO EARTH. REINFORCEMENT IN TOP SLAB SHALL BE 1 1/2" CLEAR

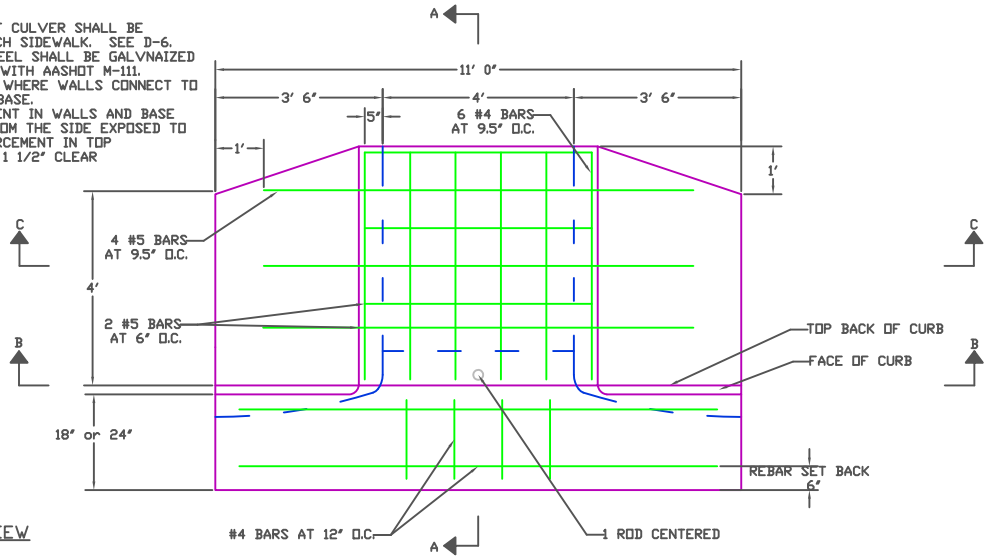

PLAN VIEW

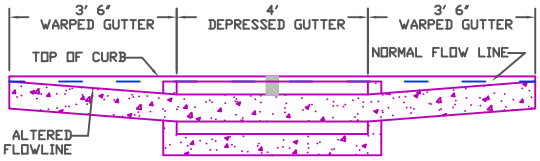

SECTION B-B

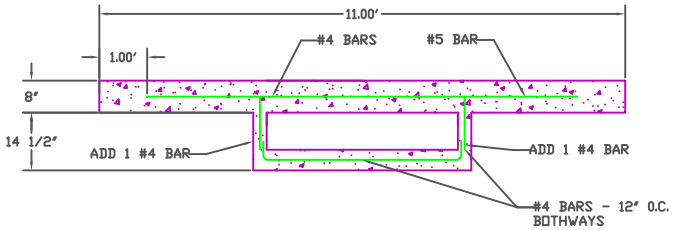

SECTION C-C

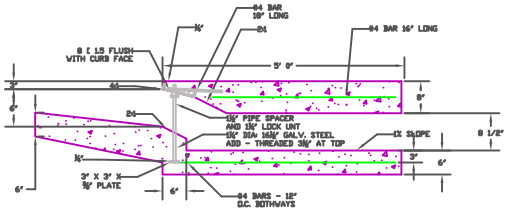

SECTION A-A

NO.	DWN.	DATE.	REVISION

Town of Gypsum

4' Scupper Detail

Date: Jan, 2009

Location: \\..\Storm\Scupper

Appendix D-1

GENERAL NOTES

1. TOP SLAB OF CULVER SHALL BE SLOPED TO MATCH SIDEWALK. SEE D-6.
2. EXPOSED STEEL SHALL BE GALVNAIZED IN ACCORDANCE WITH AASHOT M-111.
3. KEY JOINTS WHERE WALLS CONNECT TO TOP SLAB AND BASE.
4. REINFORCEMENT IN WALLS AND BASE SHALL BE 3" FROM THE SIDE EXPOSED TO EARTH. REINFORCEMENT IN TOP SLAB SHALL BE 1 1/2" CLEAR

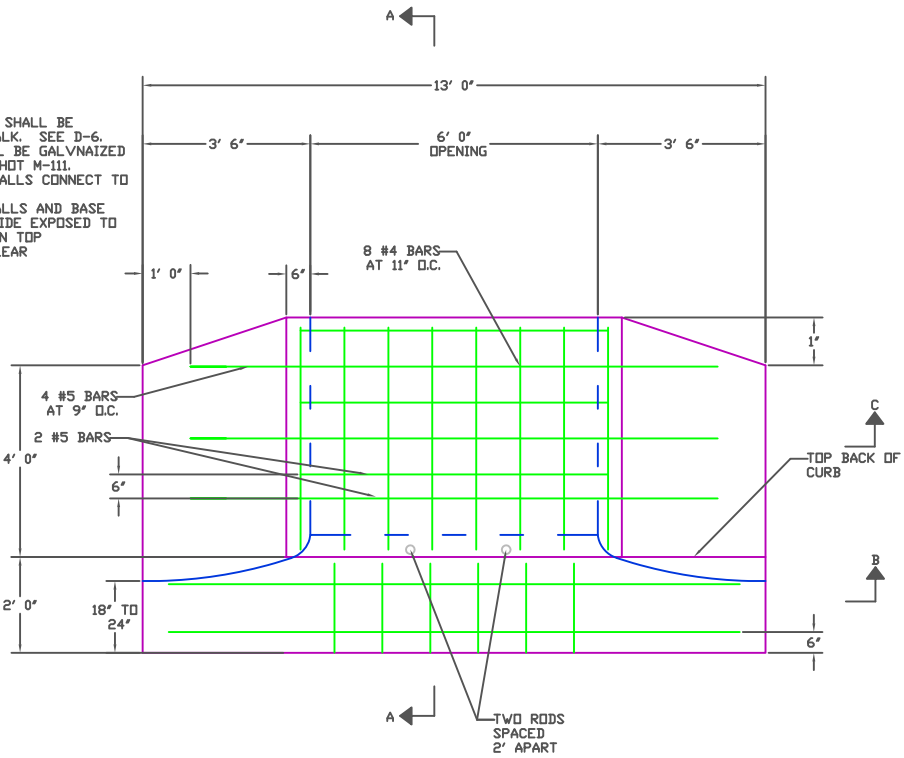

PLAN VIEW

SECTION B-B

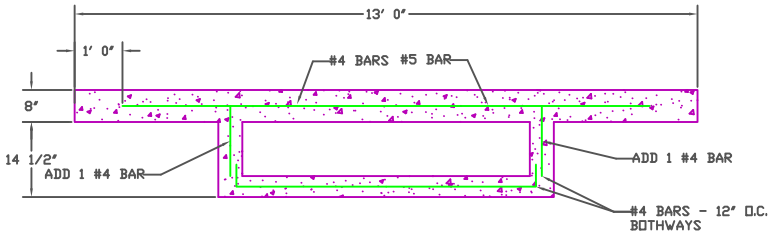

SECTION C-C

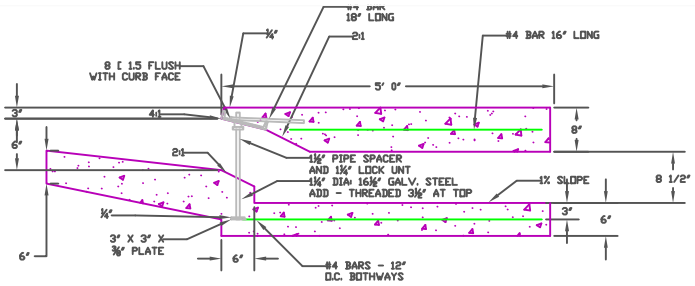

SECTION A-A

NO.	DWN.	DATE.	REVISION

Town of Gypsum

6' SCUPPER DETAIL

Date: Jan, 2009

Location: \\..\Storm\Scupper

Appendix D-2

GENERAL NOTES

1. TOP OF SLAB OF CULVERT SHALL BE SLOPED TO MATCH SIDEWLK. SEE D-6
2. EXPOSED STEEL SHALL BE GALVANIZED IN ACCORDANCE WITH AASHOT M-111.
3. KEY JOINTS WHERE WALLS CONNECT TO TOP SLAB AND BASE.
4. REINFORCEMENT IN WALLS AND BASE SHALL BE 3" FROM THE SIDE EXPOSED TO EARTH REINFORCEMENT IN TOP SLAB SHALL BE 1 1/2" CLEAR.

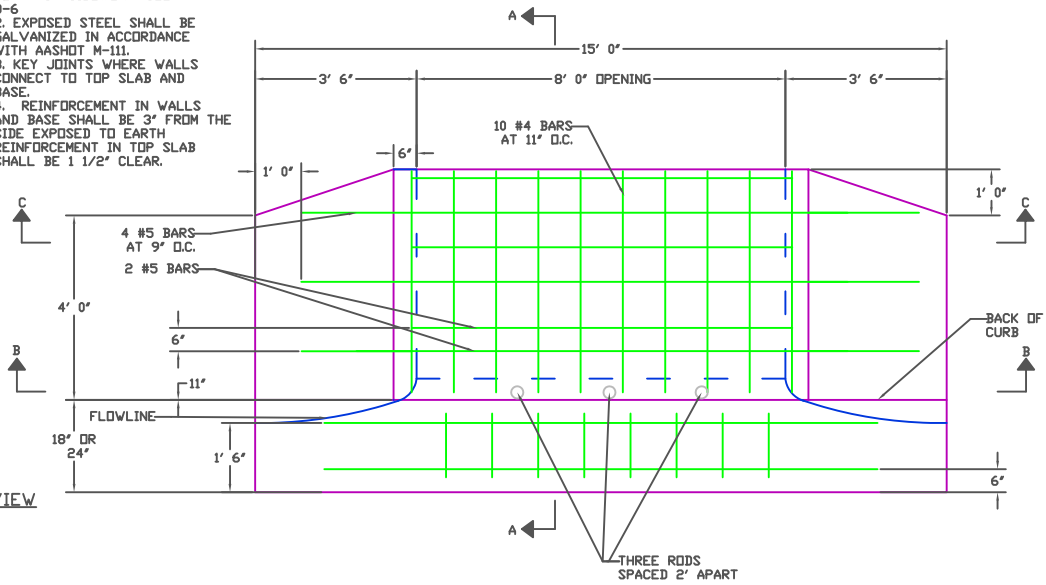

PLAN VIEW

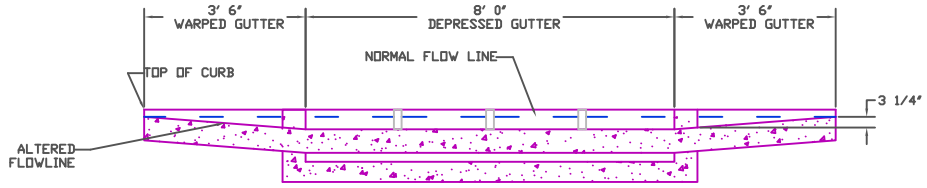

SECTION B-B

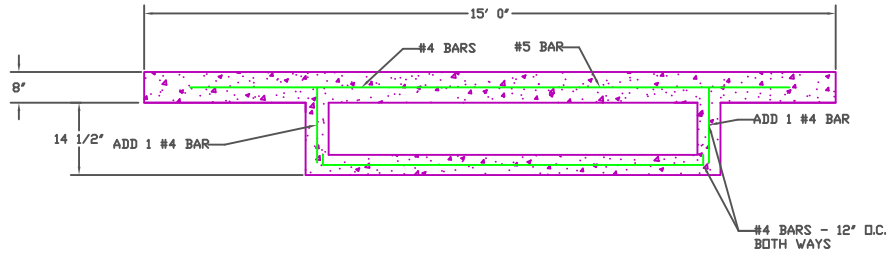

SECTION C-C

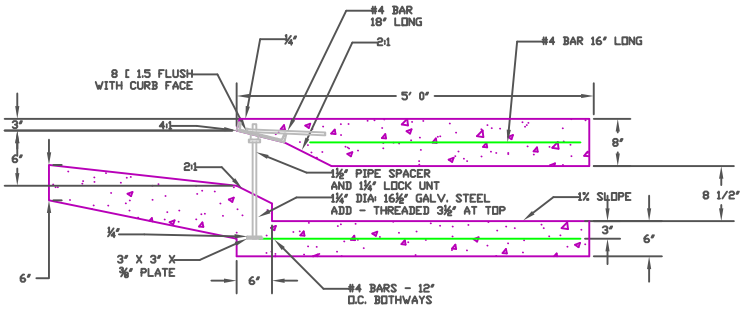

SECTION A-A

NO.	DWN.	DATE.	REVISION

Town of Gypsum

8' SCUPPER DETAIL

Date: Jan 2009

Location: \..\Storm\Scupper

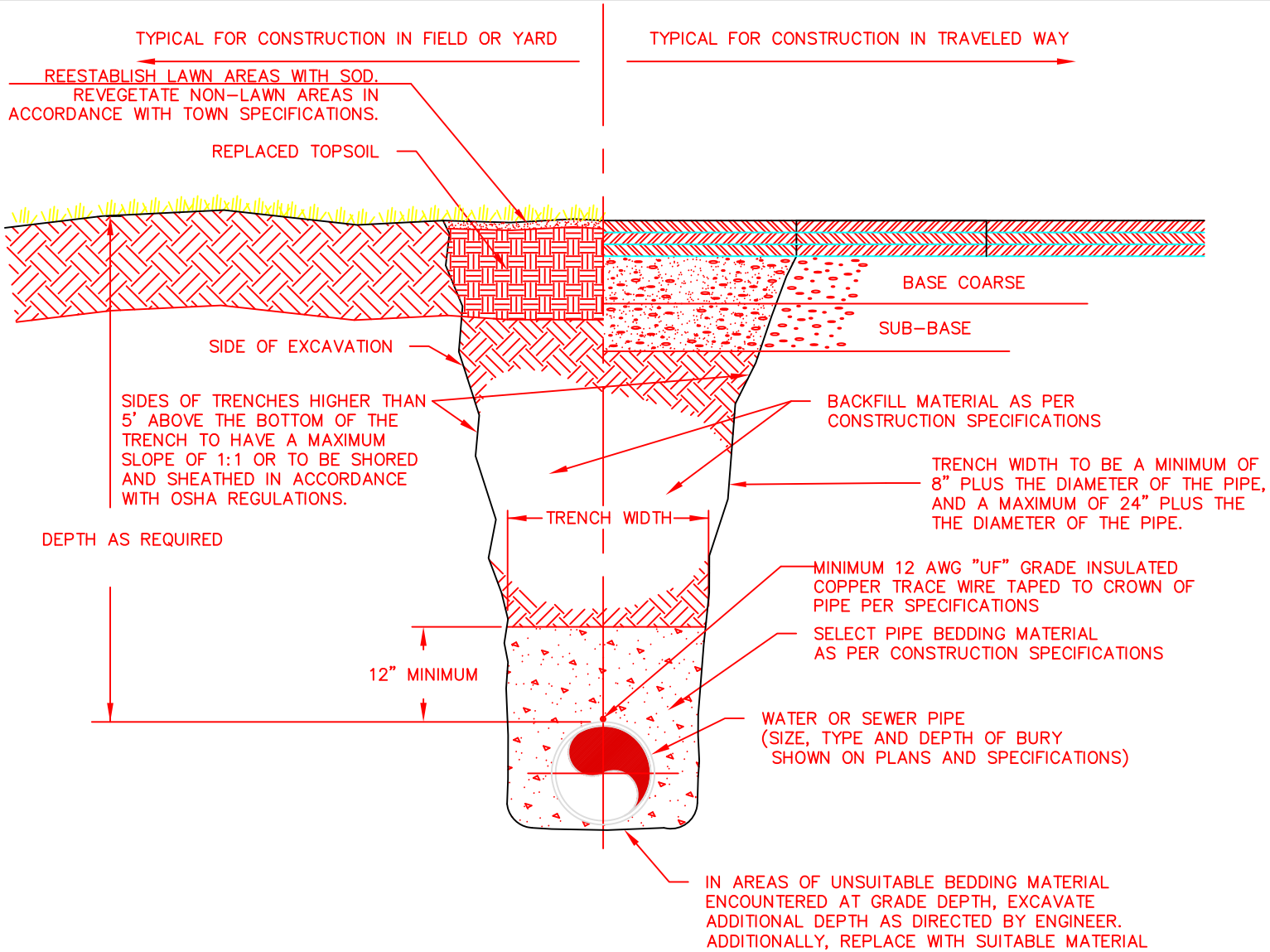

Appendix D-4

SEWER, STORM SEWER AND WATER TRENCH DETAIL

LOCATION: \\..\SEWER\W&S-TRENCH

Date: DEC 2008

Town of Gypsum

NO.	DWN.	DATE.	REVISION

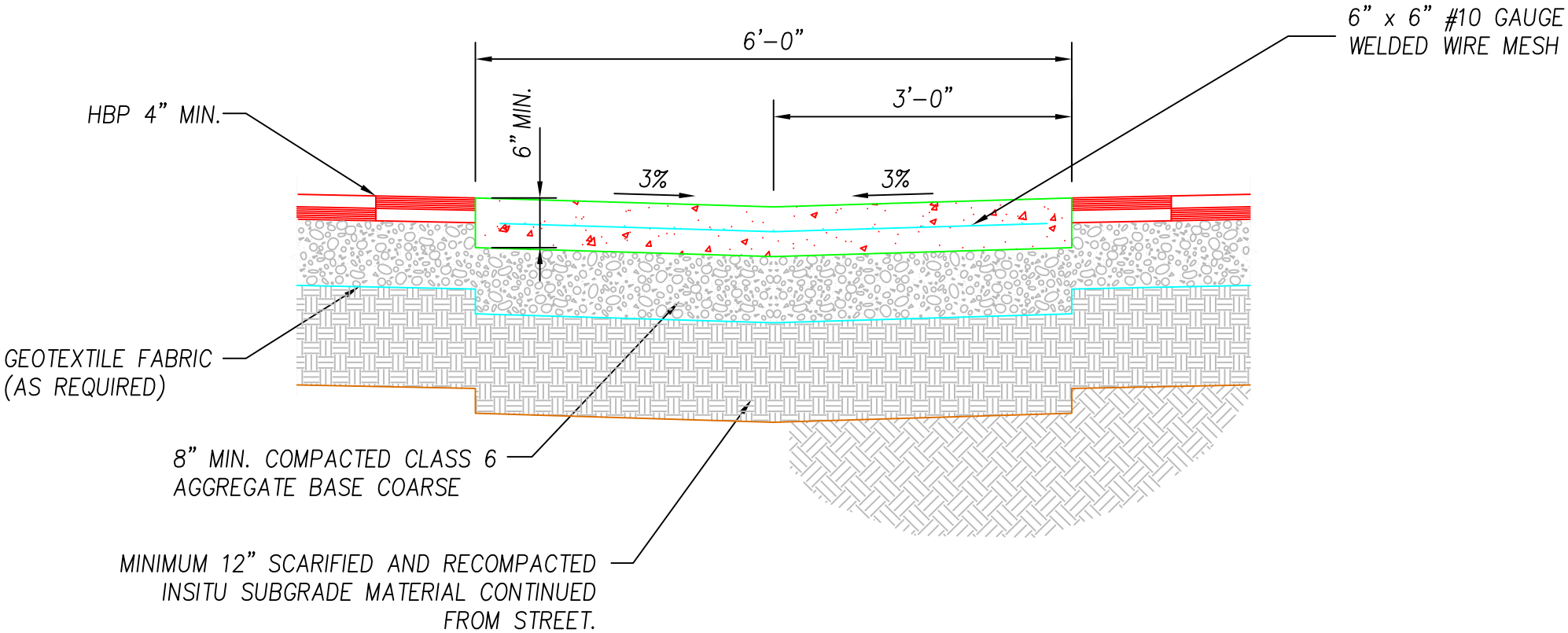

Appendix D-5

Valley Pan

Location: \\..\Storm\Valley-Pan

Date: Jan 2009

Town of Gypsum

NO.	DWN.	DATE.	REVISION

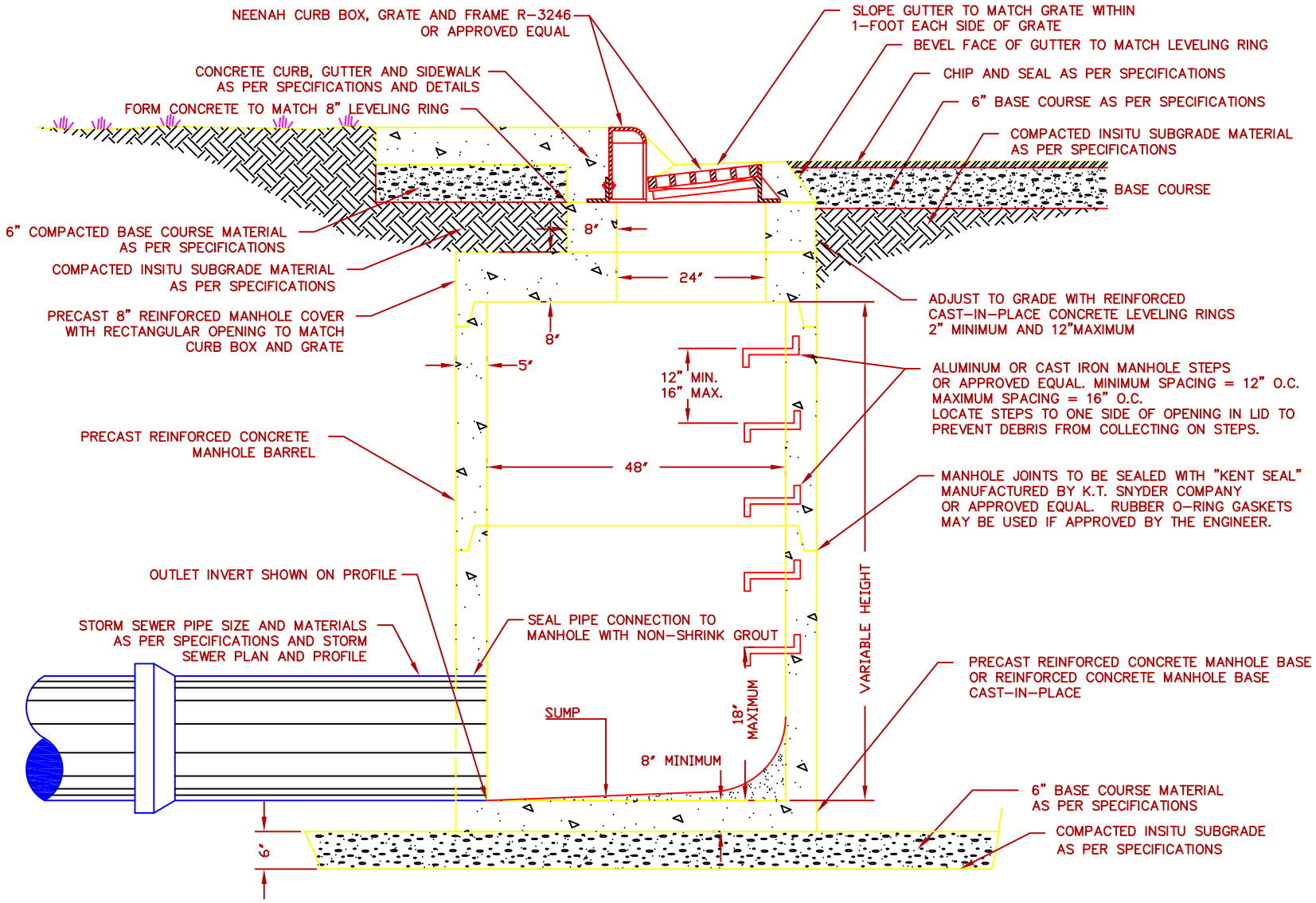

Appendix D-6

CURB INLET STORM SEWER CATCH BASIN DETAIL

Town of Gypsum

Location:	Date:
\\..\Storm\CRBINLET	JAN, 2009

NO.	DWN.	DATE.	REVISION